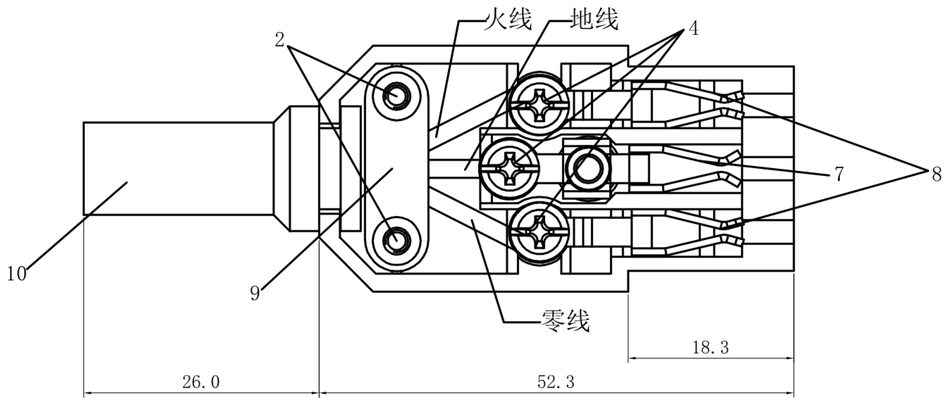

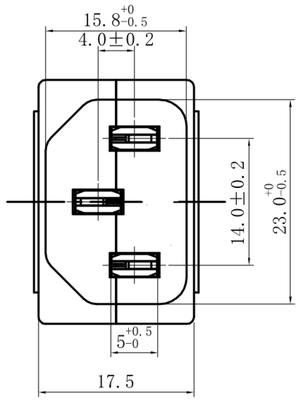

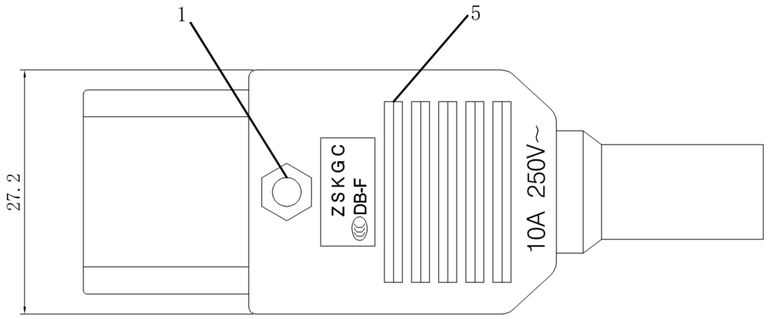

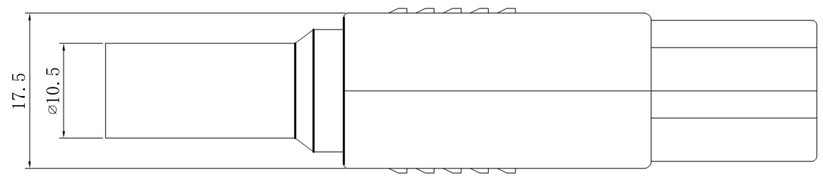

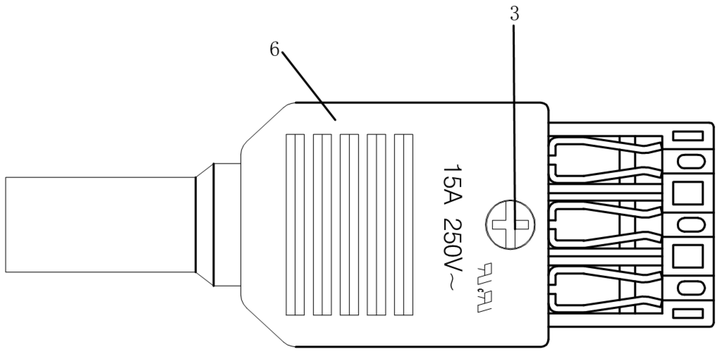

Rating :

15A 250V AC UL cUL
10A 250V AC 3C

Insert And Extract Force: 1.36kgf～6.8kgf

Terminal Strength: ≥60N

Operating Life: ≥6000 cycles

Withstand Voltage: Between all terminals:2500VAC (50-60Hz)1min
terminals to Base:3750V AC (50-60Hz)1min
Leakage Current : 1mA

Insulation Resistance: ≥100MΩ 500V DC

Body Materil: PC 94-2～0

序号	名称	材料	处理	数量	备注
1	M3×3.5螺母	铁	镀锌	1	
2	M2.5×8自攻螺钉	铁	镀锌	2	
3	M3×15螺丝	铁	镀锌	1	
4	M3.5×5螺丝	铁	镀锌	3	
5	DB-F-23基座	PC	黑色	1	
6	DB-F-23盖板	PC	黑色	1	
7	DB-F-23长弹片	黄铜	镀镍	1	
8	DB-F-23短弹片	黄铜	镀镍	2	
9	DB-F-23压线板	PC	黑色	1	
10	DB-F-23皮管	PVC	黑色	1	

ITEM NO.	DESCRIPTION	DRAWN	DATE

東莞市高迪電子有限公司
DONG GUAN GAO DI ELECTRONICS CO., LTD

TOLERANCE UNLESS OTHERWISE STATED : Up to 5 ±0.2; Above 5 ~ 15 ±0.3; Above 15 ~ 30 ±0.4; Above 30 ~ 50 ±0.5; Angle ±0.3°

3RD. ANGEL'S

UNITS MM

DRAWN BY: Ming Ming Zou	DATE 10/31/13	MAT'L	
CHECKED BY: Ning Ning Su	DATE 10/31/13	FINISH	
APPROVED BY: Jia Xiang	DATE 10/31/13	SCALE	1 : 1
		SHEET NO.	1 of 1

TITLE	SWITCH+JACK		
MODLE	AC POWER SOCKET		
DWG NO.	GD-DB-F-23	SIZE	A4
PART NO.		VER	R